SAMUEL HEATH

Product Number: V6K47CCR

Description: 3 Hole wall mounted tub filler

Standards

Flow rates

Gallons/Min	1.5 PSI	7.3 PSI	14.5 PSI	29.0 PSI	43.5 PSI	58.0 PSI	72.5 PSI
	0.0	9.9	14.5	22.0	25.4	28.4	28.4

Flow rate data provided is indicative of each product and is given in open outlet conditions. Installation design, external connections and fittings not supplied may affect the data provided.

Finishes Available

Chrome Plate
Polished Nickel
Non Lacquered Brass
Antique Gold
Satin Nickel (US15)
City Bronze
Country Bronze
Brushed Gold Gloss
Brushed Gold Matt
Brushed Gold Unlacquered
Antique Brass Matt
Antique Brass Gloss
Amber Brass

Control Options Available

Specification Drawing

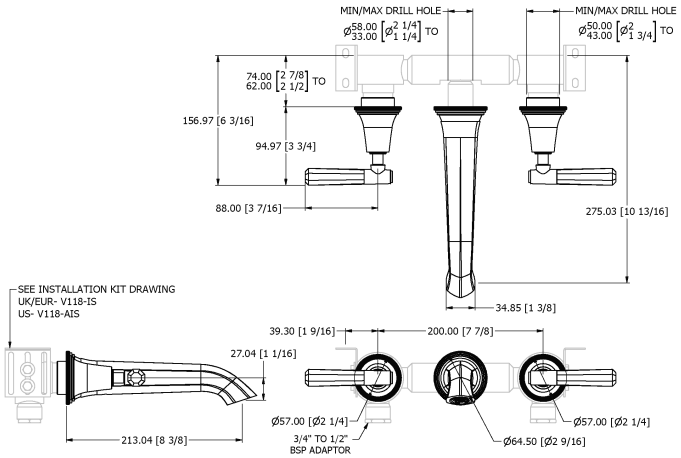

UK Customer Service
Leopold Street
Birmingham
B12 0UJ
Tel: +44 121 766 4200
Email: info@samuel-heath.com

US Customer Service
Federal I.D. No. 58-1504682
Email: usa@samuel-heath.com

Specification Enquiries
Design Centre Chelsea Harbour
1st Floor, North Dome, London
SW10 0XE
Tel: 020 7352 0249
Email: showroom@samuel-heath.com