SAMUEL HEATH

Product Number: V7K16LL

Description: 3 Hole basin filler with pop-up waste, 259mm spout height

Standards

LP Min 0.5 bar

Flow can be limited e.g. for BREEAM

water saving

Flow rates

Litres/Min	0.1 Bar	0.5 Bar	1.0 Bar	2.0 Bar	3.0 Bar	4.0 Bar	5.0 Bar
		2.5	3.7	5.2	6.6	7.6	8.7

Flow rate data provided is indicative of each product and is given in open outlet conditions. Installation design, external connections and fittings not supplied may affect the data provided.

Finishes Available

Chrome Plate

Polished Nickel

Stainless Steel Finish

Stainless Steel with Matt Black

Urban Brass

City Bronze

Matt Black Chrome

Country Bronze

Urban Brass Matt Lacquered

Antique Brass Matt

Antique Brass Gloss

Amber Brass

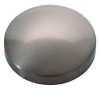
Anthracite

Control Options Available

Specification Drawing

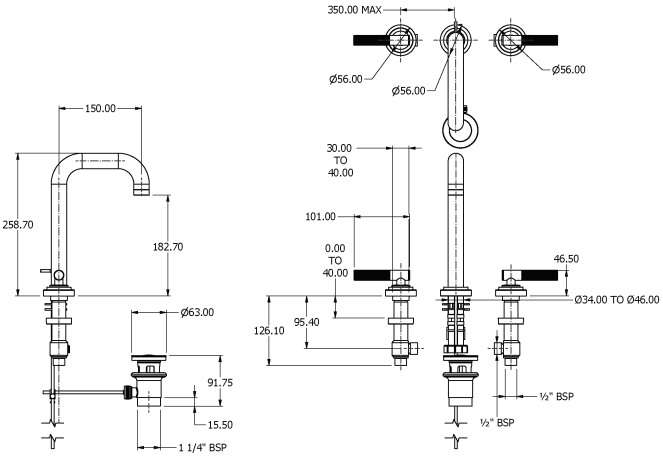

UK Customer Service
Leopold Street
Birmingham
B12 0UJ
Tel: +44 121 766 4200
Email: info@samuel-heath.com

US Customer Service
Federal I.D. No. 58-1504682
Email: usa@samuel-heath.com

Specification Enquiries
Design Centre Chelsea Harbour
1st Floor, North Dome, London
SW10 0XE
Tel: 020 7352 0249
Email: showroom@samuel-heath.com