SAMUEL HEATH

Product Number: T11K15LA

Description: 3 Hole basin filler, 230mm spout height

Standards

Flow can be limited e.g. for BREEAM

water saving

WRAS APPROVED PRODUCT

Finishes Available

Chrome Plate

Polished Nickel

Stainless Steel Finish

Stainless Steel with Matt Black

City Bronze

Matt Black Chrome

Brushed Gold Matt

Polished Nickel with Gloss Black Chrome

Brushed Gold Matt with City Bronze

Stainless Steel Finish with City Bronze

Antique Gold with Gloss Black Chrome

Antique Brass Matt

Control Options Available

Specification Drawing

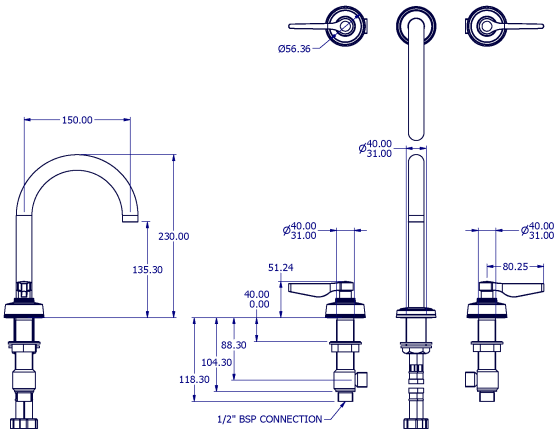

UK Customer Service
Leopold Street
Birmingham
B12 0UJ
Tel: +44 121 766 4200
Email: info@samuel-heath.com

US Customer Service
Federal I.D. No. 58-1504682
Email: usa@samuel-heath.com

Specification Enquiries
Design Centre Chelsea Harbour
1st Floor, North Dome, London
SW10 0XE
Tel: 020 7352 0249
Email: showroom@samuel-heath.com